VA 304-5

3-way solenoid valve
direct actuated, NC
(normally closed)

Application
Neutral and mildly aggressive liquids, gases and vapors

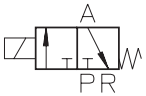

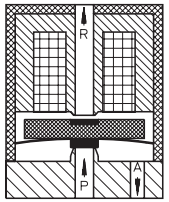

Type/ Order No.	Size s [mm]	Orifice [mm]	Port size	Pressure range [bar]	KV-value [m³/h]	Weight [kg]
VA 304-505	15	0,5	Cartridge	0 - 10	---	0,022
VA 304-506	15	1,0	Cartridge	0 - 7	---	0,022
VA 304-507	15	1,5	Cartridge	0 - 3,5	---	0,022
VA 304-508	15	2,0	Cartridge	0 - 1	---	0,022

Sealing material: **P** (NBR) **E** (EPDM) **V** (FPM) **Z** (FFKM)

Body material:	Stainless steel (1.4305)	Power consumption:	1 - 1,5 W
Inner parts:	Stainless steel (1.4310 / 1.4105)	Voltage tolerance:	-15%... +10%
		Duty cycle:	100 %
Mounting direction:	Free, preferred upwards	Operating frequency:	max. 200/s
Max. ambient temp.:	50 °C	Cycle time:	1 ms to 5 ms
Viscosity of the medium:	max. 21 mm²/s (3 °E)		
Static pressure:	max. 20 bar		
Standard voltage:	DC: 24 V, 12 V, 9 V, 6 V		

Other configurations upon request

The right to modification is reserved

staiger
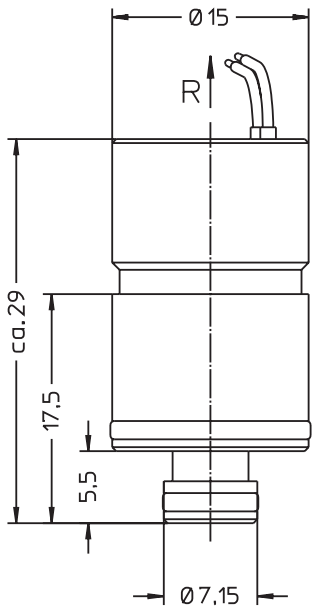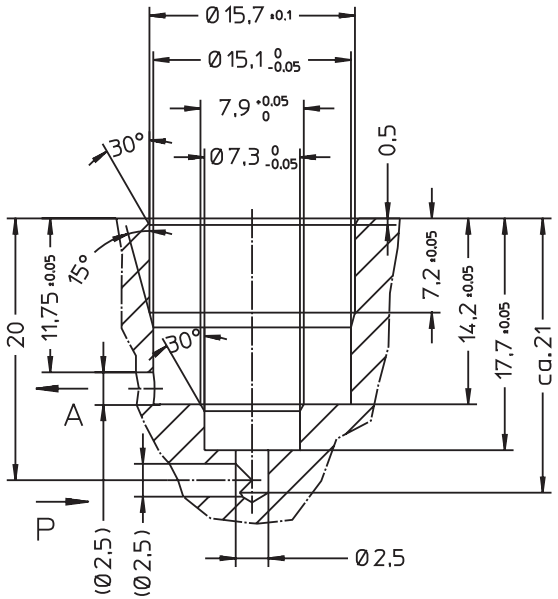
cartridge diagram